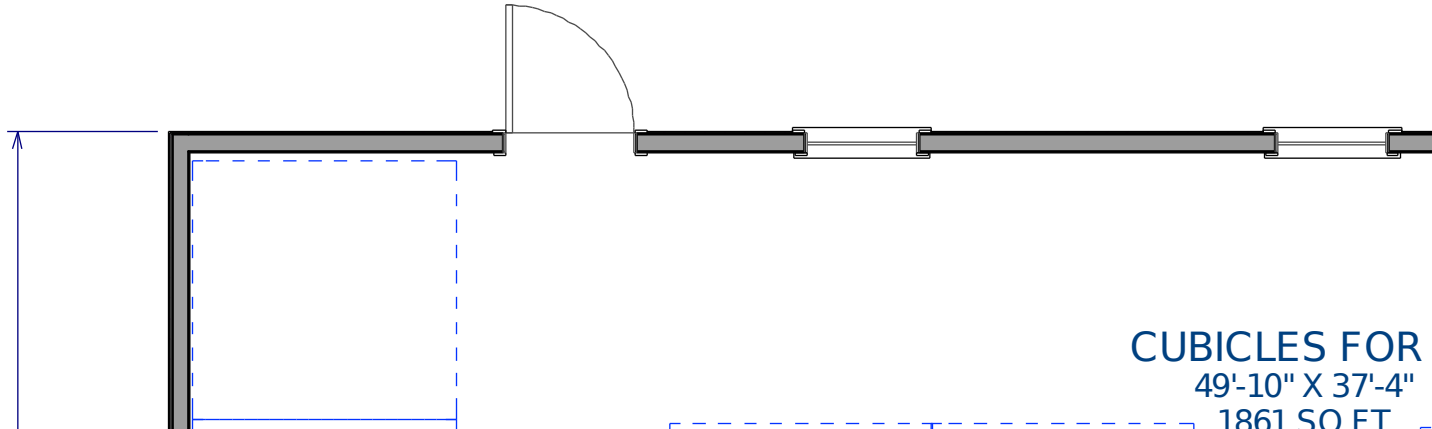
CUBICLES FOR
49'-10" X 37'-4"
1861 SQ FT

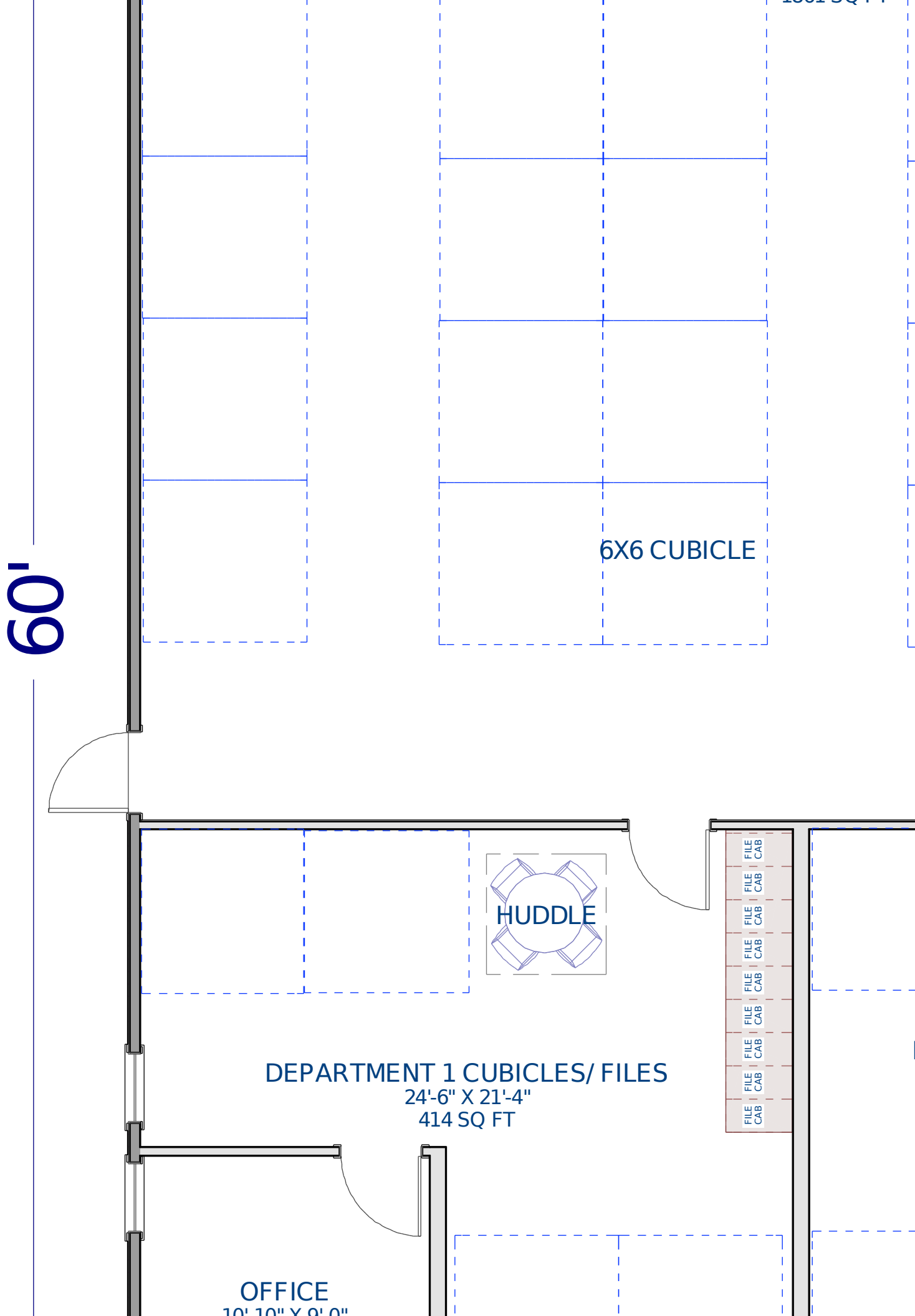
60'
6X6 CUBICLE
HUDDLE
FILE CAB
DEPARTMENT 1 CUBICLES/ FILES
24'-6" X 21'-4"
414 SQ FT
OFFICE
10'-10" X 9'-0"

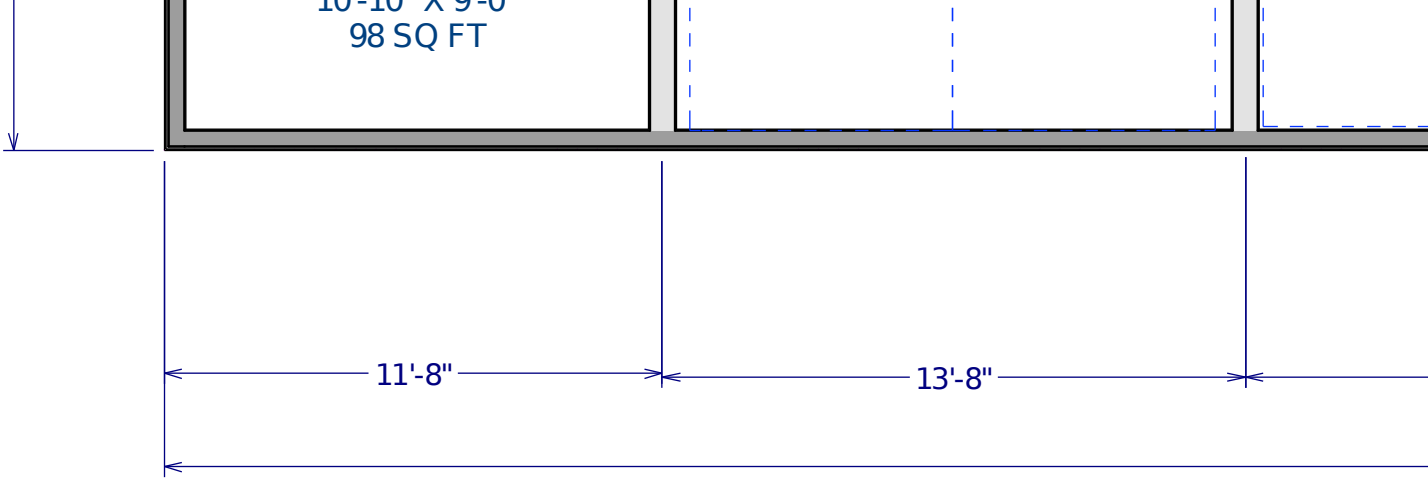
10'-10" X 9'-0"
98 SQ FT
11'-8"
13'-8"

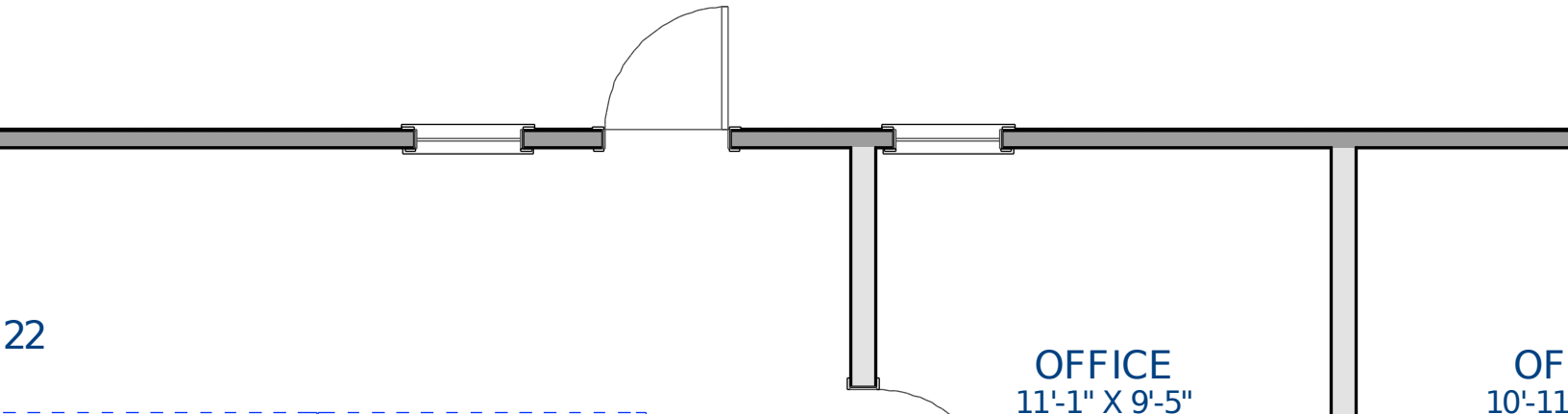
22
OFFICE
11'-1" X 9'-5"
OF
10'-11

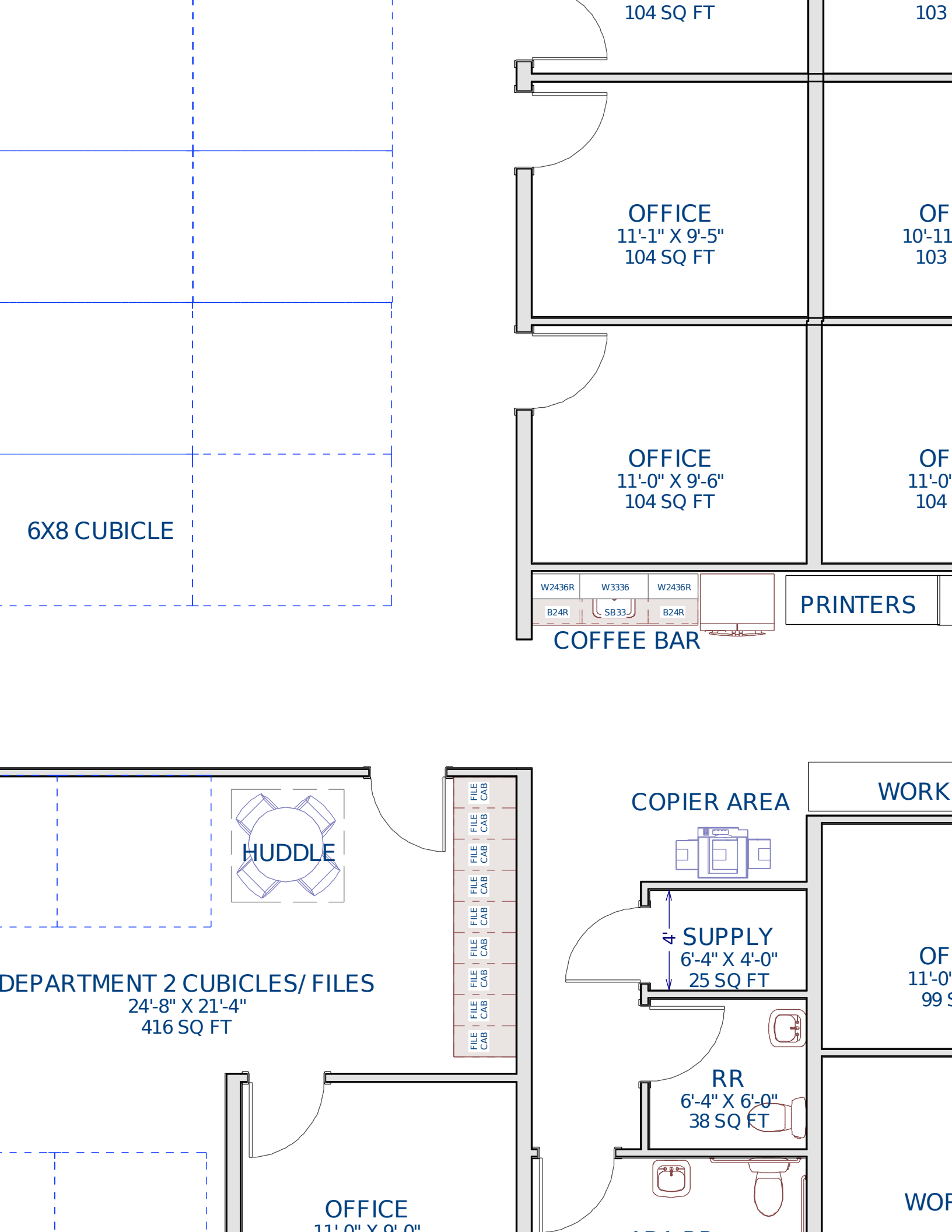
104 SQ FT
103
OFFICE
11'-1" X 9'-5"
104 SQ FT
OF
10'-11
103
OFFICE
11'-0" X 9'-6"
104 SQ FT
OF
11'-0'
104
6X8 CUBICLE
W2436R
W3336
W2436R
B24R
SB33
B24R
COFFEE BAR
PRINTERS
HUDDLE
FILE CAB
DEPARTMENT 2 CUBICLES/ FILES
24'-8" X 21'-4"
416 SQ FT
COPIER AREA
WORK
4'
SUPPLY
6'-4" X 4'-0"
25 SQ FT
OF
11'-0'
99 S
RR
6'-4" X 6'-0"
38 SQ FT
OFFICE
WOR

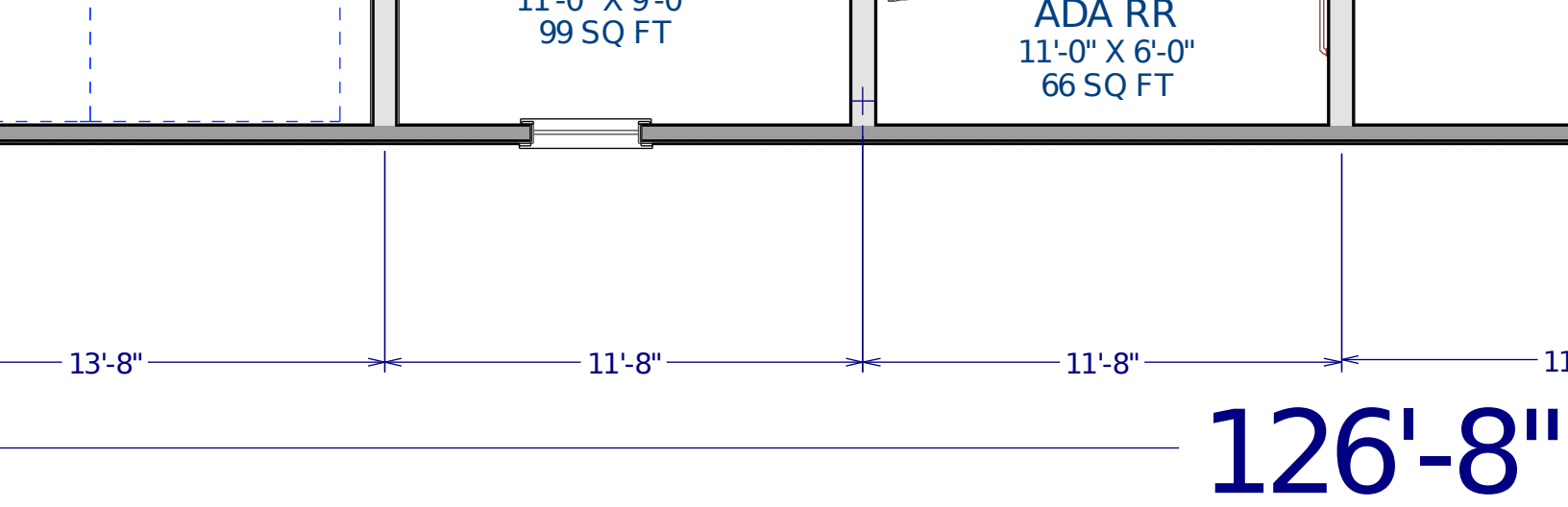
11'-0" X 9'-0"
99 SQ FT
ADA RR
11'-0" X 6'-0"
66 SQ FT
13'-8"
11'-8"
11'-8"
11
126'-8"

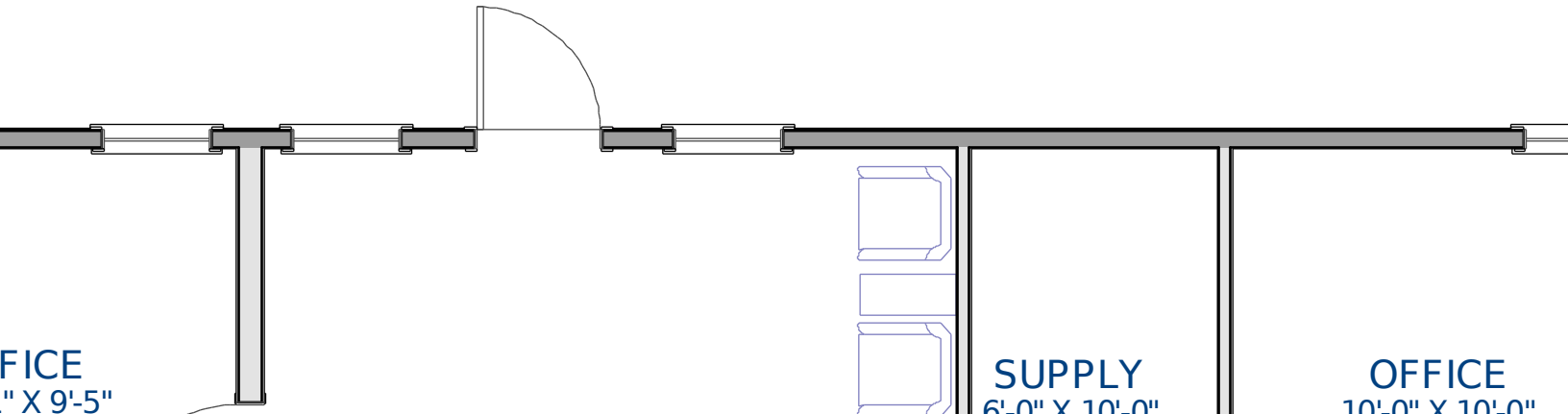
FICE
" X 9'-5"
SUPPLY
6'-0" X 10'-0"
OFFICE
10'-0" X 10'-0"

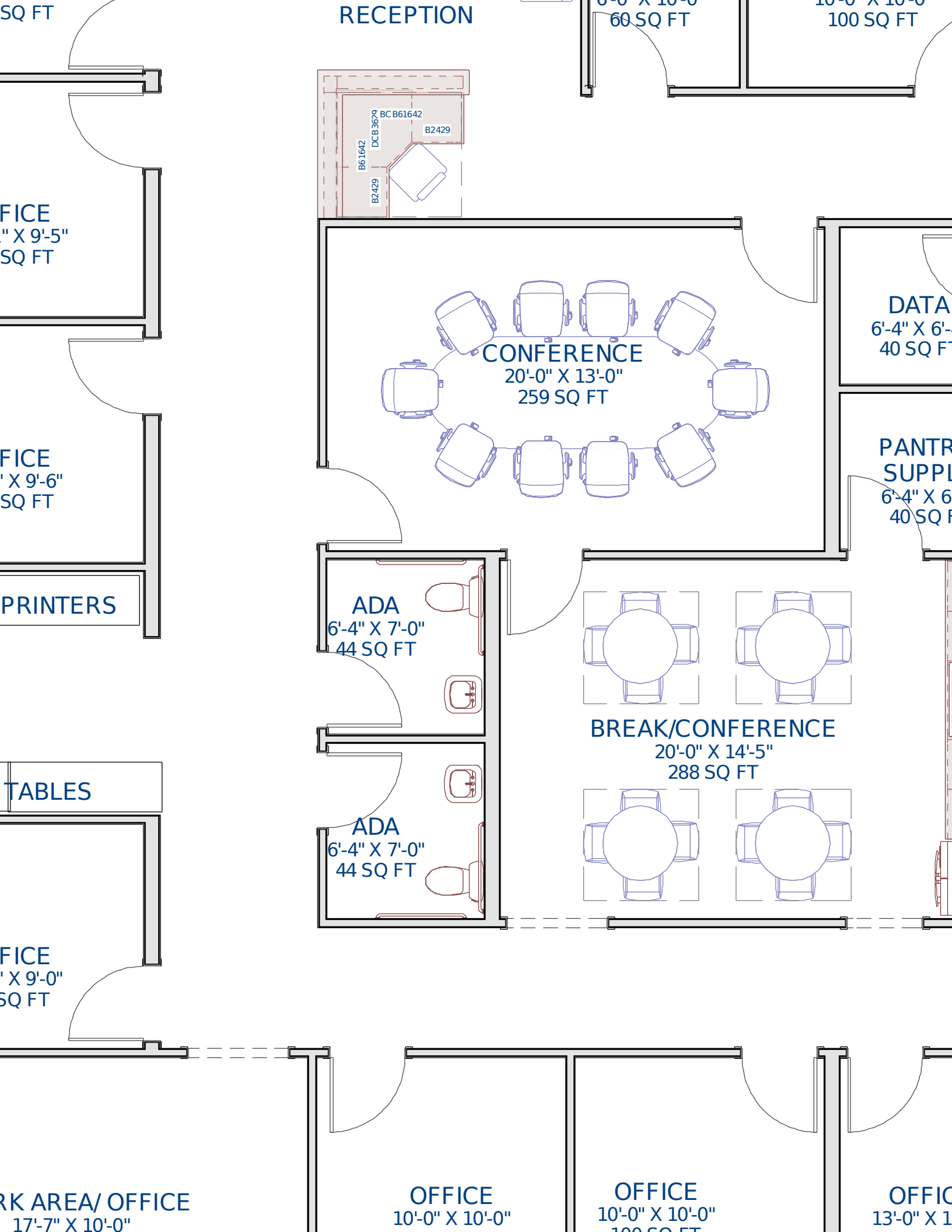
SQ FT
RECEPTION
60 SQ FT
100 SQ FT
BC B61642
B2429
DCB 3629
B61642
B2429
FICE
" X 9'-5"
SQ FT
CONFERENCE
20'-0" X 13'-0"
259 SQ FT
DATA
6'-4" X 6'-
40 SQ FT
FICE
' X 9'-6"
SQ FT
PANTR
SUPPL
6'-4" X 6
40 SQ F
PRINTERS
ADA
6'-4" X 7'-0"
44 SQ FT
BREAK/CONFERENCE
20'-0" X 14'-5"
288 SQ FT
TABLES
ADA
6'-4" X 7'-0"
44 SQ FT
FICE
' X 9'-0"
SQ FT
RK AREA/ OFFICE
17'-7" X 10'-0"
OFFICE
10'-0" X 10'-0"
OFFICE
10'-0" X 10'-0"
100 SQ FT
OFFIC
13'-0" X 1

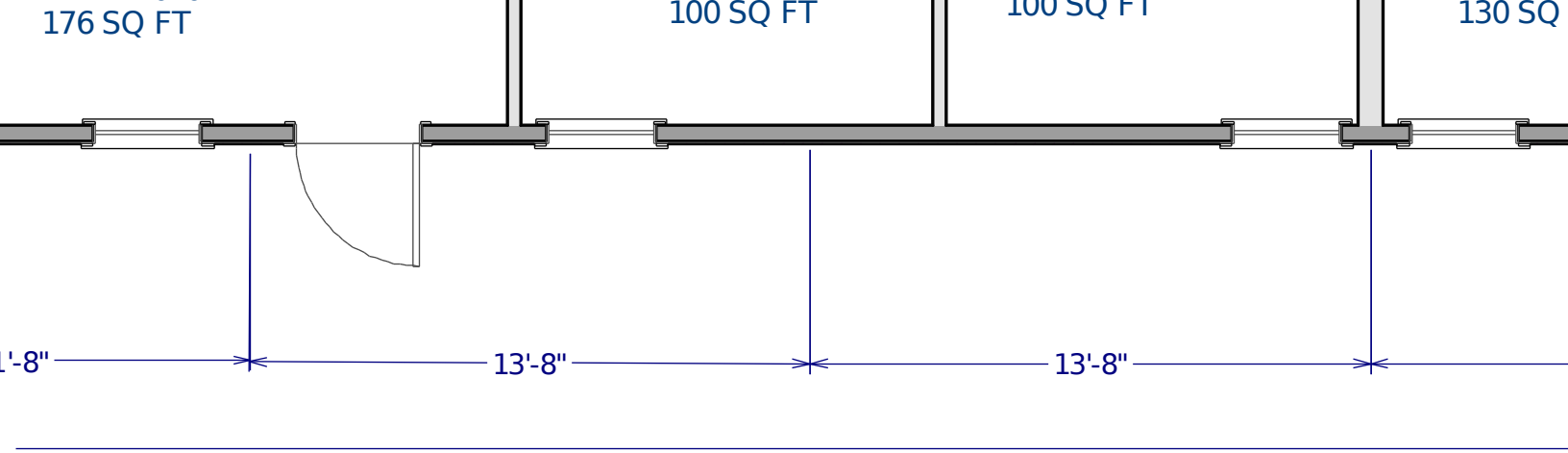
176 SQ FT
100 SQ FT
100 SQ FT
130 SQ
1'-8"
13'-8"
13'-8"

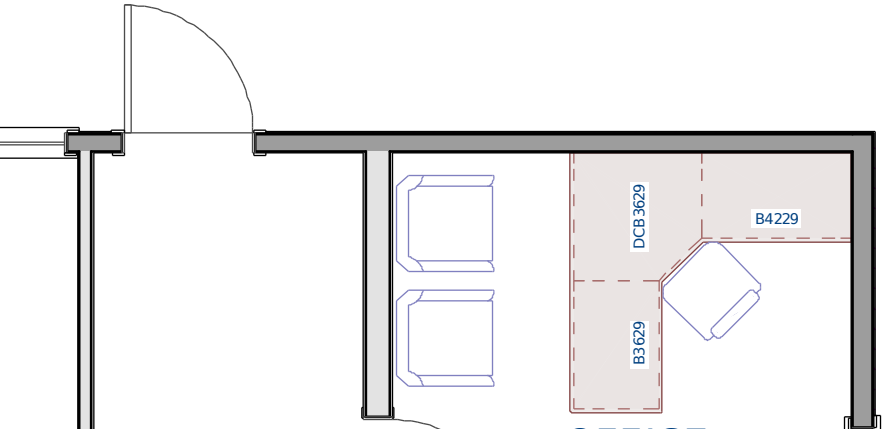
DCB 3629
B4229
B3629

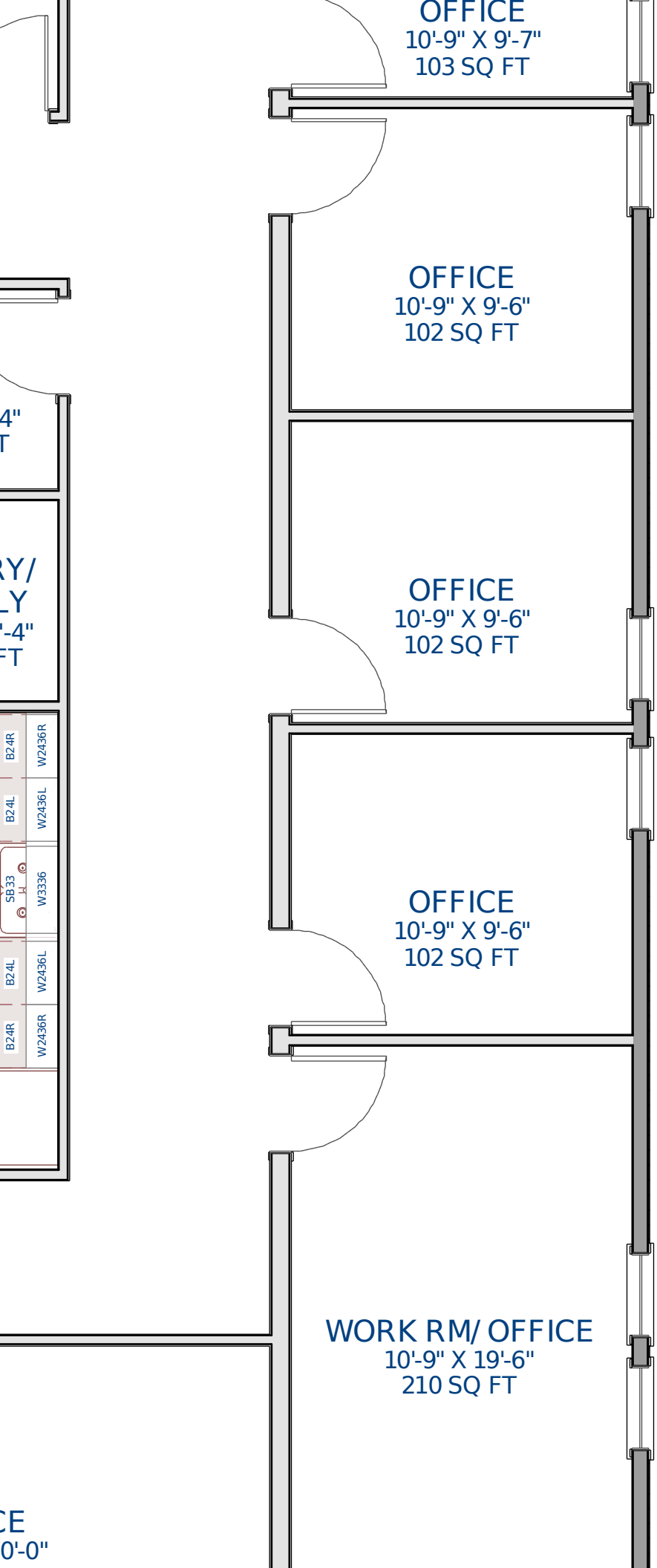
OFFICE
10'-9" X 9'-7"
103 SQ FT
OFFICE
10'-9" X 9'-6"
102 SQ FT
OFFICE
10'-9" X 9'-6"
102 SQ FT
OFFICE
10'-9" X 9'-6"
102 SQ FT
WORK RM/ OFFICE
10'-9" X 19'-6"
210 SQ FT
B24R
W2436R
B24L
W2436L
SB33
W3336
B24L
W2436L
B24R
W2436R

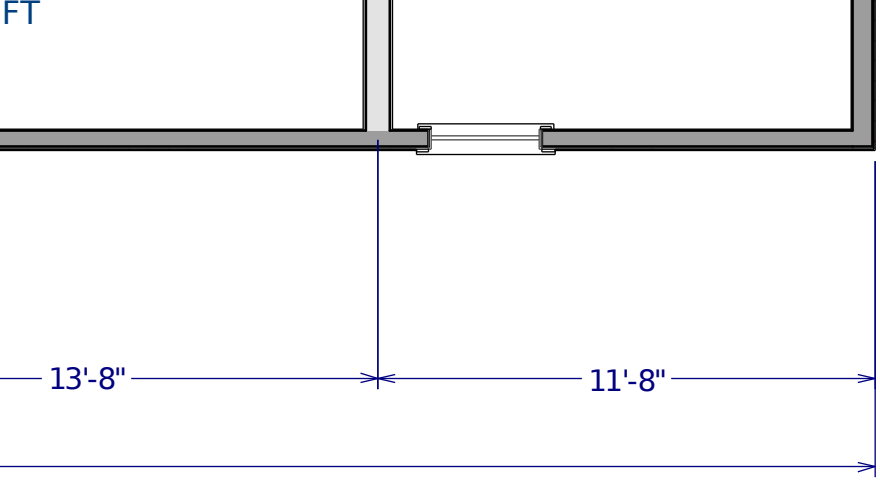
FT
13'-8"
11'-8"